A Comparative Assessment between Architectural innovations coming from the SESAME and the Coherent 5G Projects

Alexandros Kostopoulos, Ph.D.

Research Programs Section, Fixed

Research & Development Fixed & Mobile,

Technology Strategy & Core Network Division, Fixed & Mobile

Hellenic Telecommunications Organization (OTE S.A.)

Athens, Greece _ October 25, 2017

Introduction

- The exponential growth of mobile data traffic, fueled by new demanding personalized applications, still remains an important challenge for the mobile network operators.
- 5G scene needs to couple fast connectivity and optimized spectrum usage with cloud networking and high processing power, optimally combined in a converged environment.
- **Two research projects to highlight the common aspects towards the 5G architecture design:**
  - ***SESAME***
  - ***COHERENT***

SESAME Vision and Innovations

- The placement of **network intelligence** and **applications in the network edge** ***through NFV and Edge Cloud Computing***
- SESAME proposes the ***Cloud-Enabled Small Cell (CESC)*** concept, a new multi-operator enabled Small Cell that integrates a virtualized execution platform (i.e., the Light DC) for deploying NVFs, and executing novel applications and services inside the access network infrastructure.
- CESCs are designed, developed and implemented, **to offer access to network capacity coupled with mobile edge computing resources** in a single device.
- These resources are offered on-demand to Communications Service Provider (CSPs), profiling both access and edge computation resources to satisfy the specific CSPs' needs.

SESAME Challenges

- **Virtualization of Small Cell** and their utilization and partitioning into logically isolated ‘slices’, offered to multiple operators/tenants.
- **Capability to accommodate multiple operators** under the same infrastructure, satisfying the profile and requirements of each operator separately
- With the advent of Cloud Computing, SDN and NFV, t**o have general-purpose computing and storage assets** at the edge of mobile networks.

LTE world

- A Small Cell network capable to support more than one network operator is envisaged.
- 3GPP specifications have already added some support for Radio Access Network (RAN) sharing and Multi-Operator Core Network (MOCN), where the shared RAN is directly connected to each of the multiple operator's core networks → ***multi-tenancy features in SESAME platform.***
- The infrastructure consists of a number of Small Cells and the corresponding SC network functions, such as gateways and management systems.

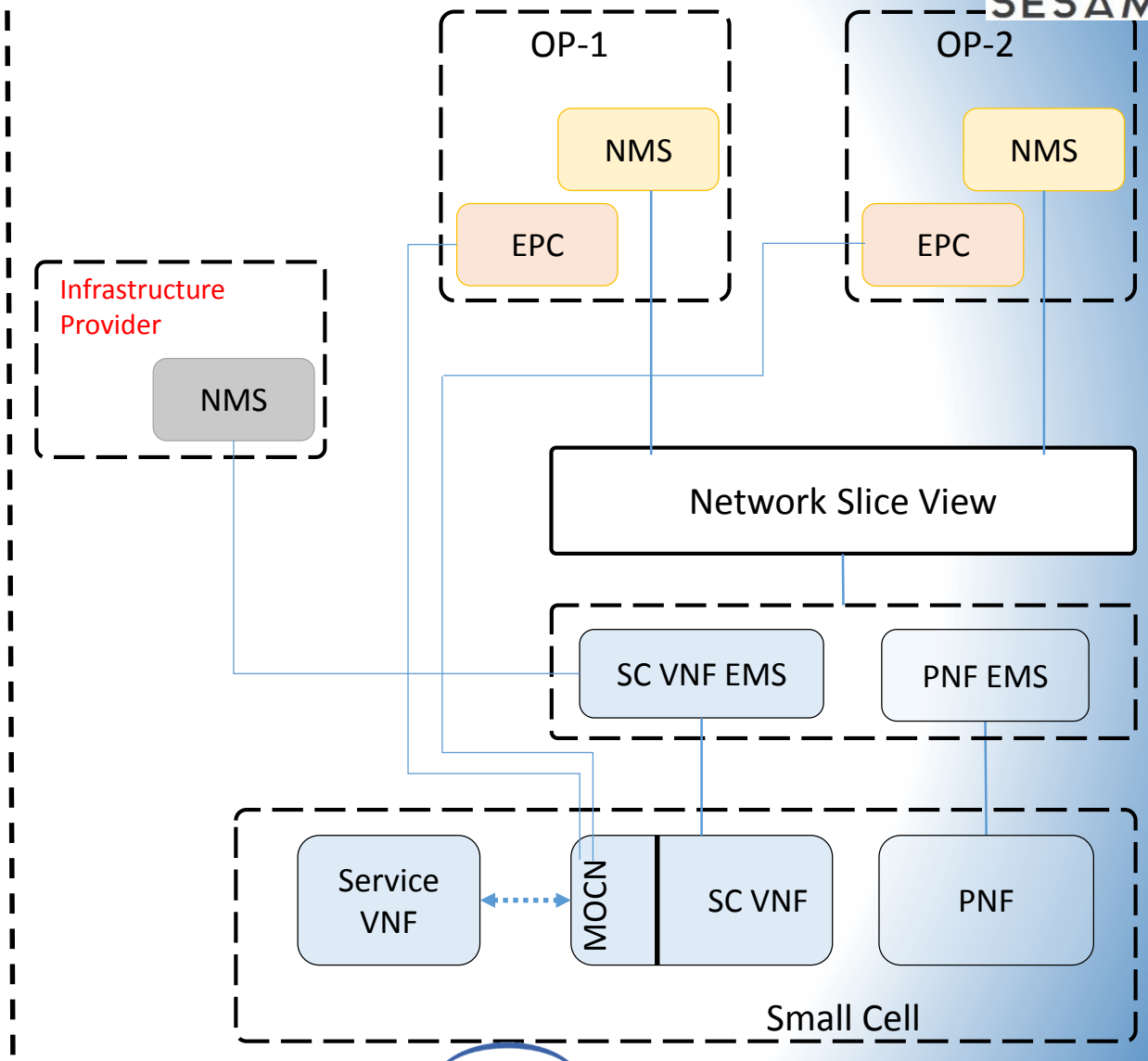

NFV world

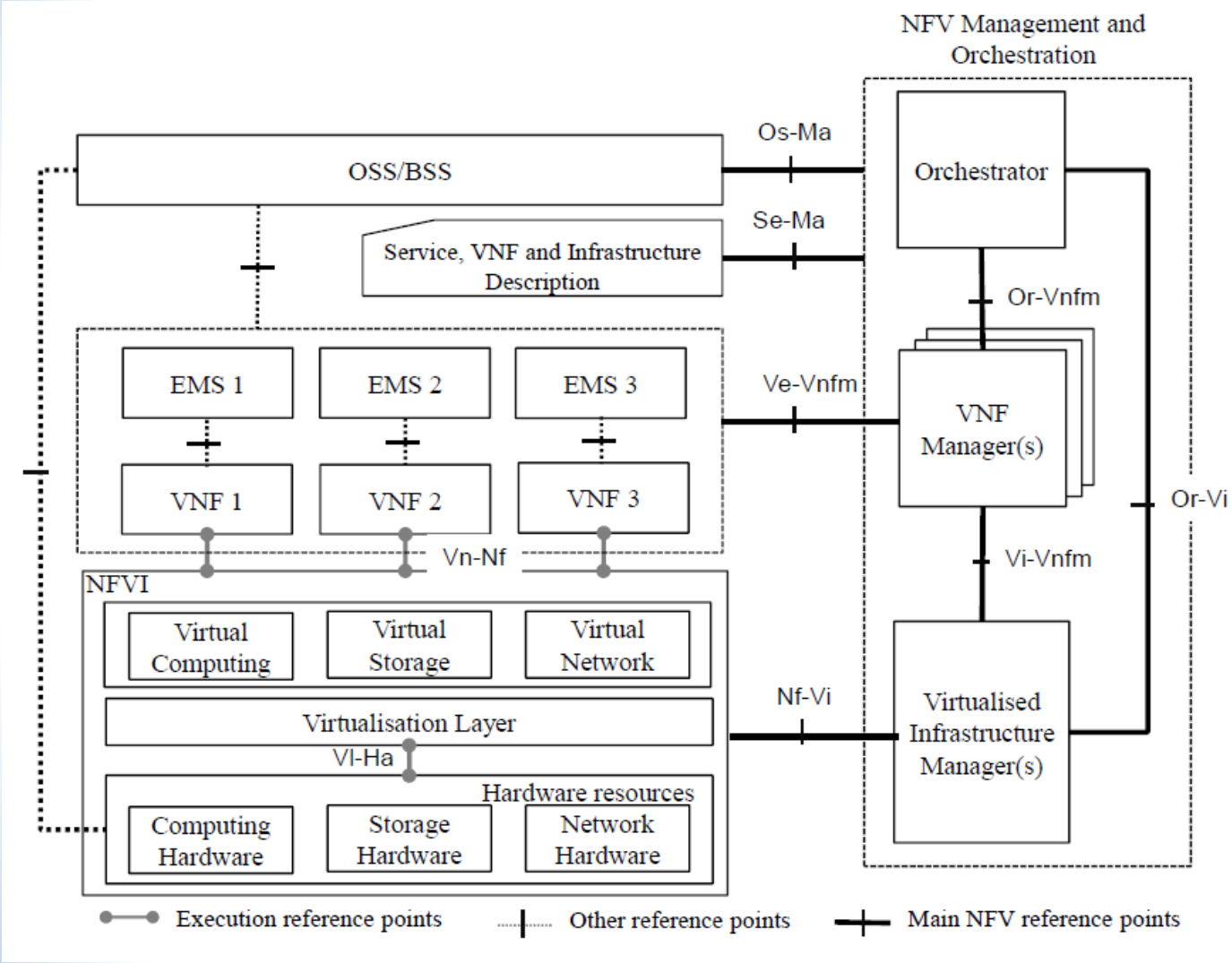

- The NFV concept is going to be used as an enabler that will offer a virtualisation platform and meet the requirements of SESAME, namely NFV-driven small cell functions and NFV-based network services.

SESAME architecture

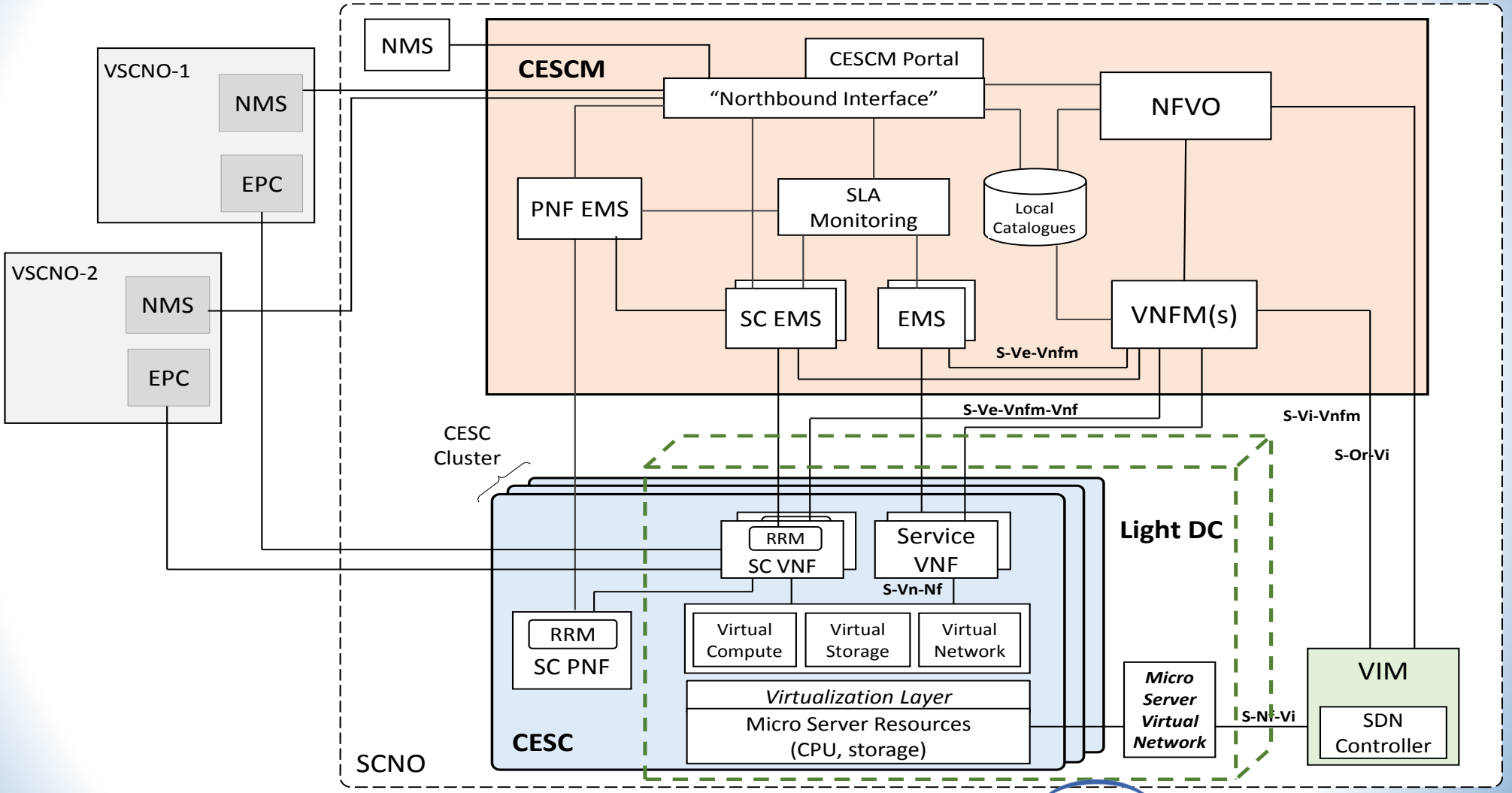

SESAME architecture

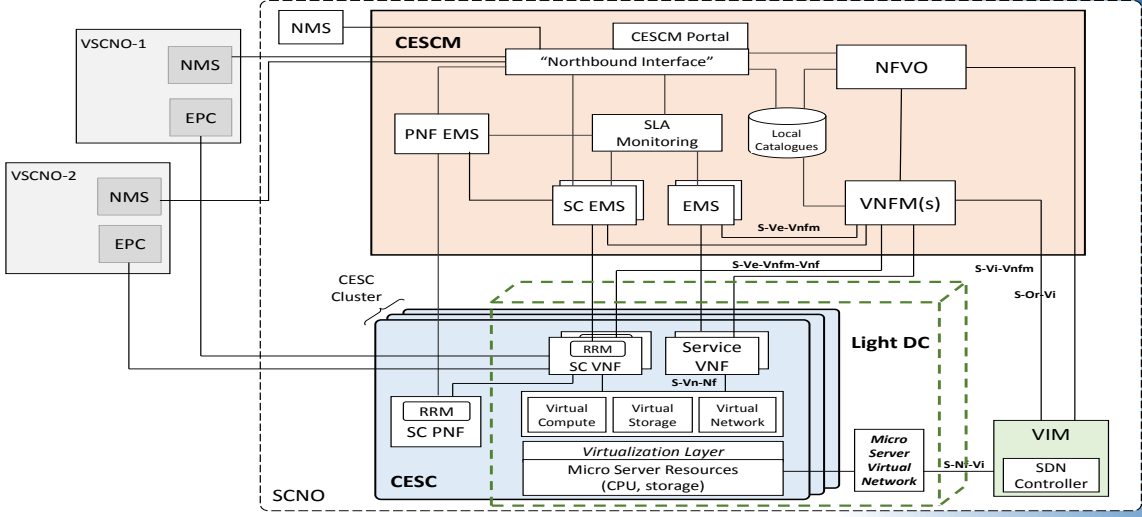

- The platform of CESCs offers computing, storage and radio resources.
- Through virtualization, the CESC cluster can be seen as a *cloud of resources* which can be sliced to enable multi-tenancy.
- Cloud-based processing and storage resources are provided through a virtualised execution platform.
- This execution platform is used to support the required VNFs that implement the different features/capabilities of the Small Cells (and eventually of the core network).

SESAME architecture

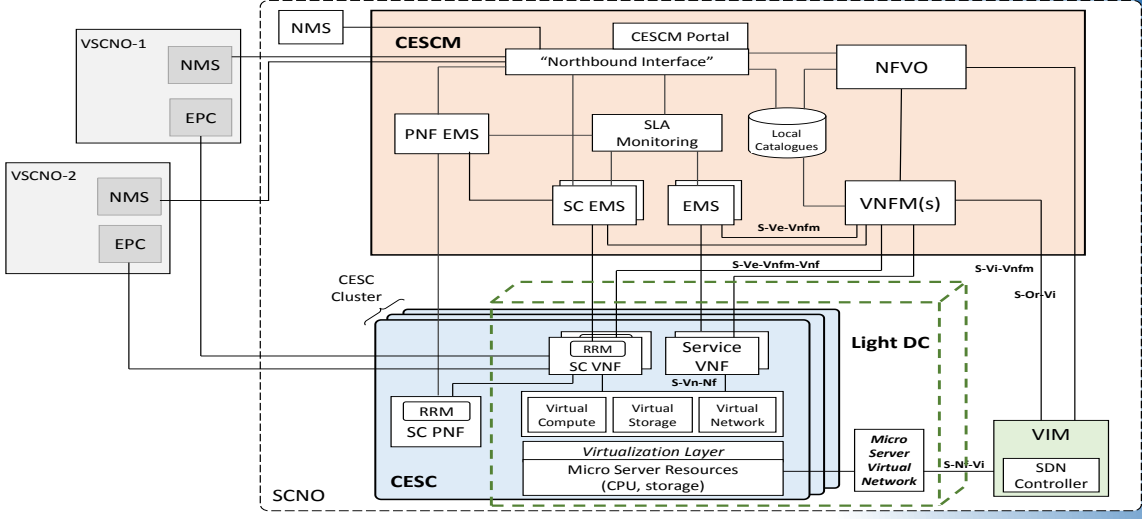

- The CESC cluster becomes a neutral host for mobile SCNO or VSCNO which want to share IT and network resources at the edge of the mobile network.
- Network Services are supported by VNFs hosted in the Light DC (constituted by one or more CESCs), leveraging on SDN and NFV functionalities that allow achieving an adequate level of flexibility and scalability at the cloud infrastructure edge.
- VNFs are executed in the Light DC, which is provided with a hypervisor, specifically extended to support carrier grade computing and networking performance.

SESAME architecture

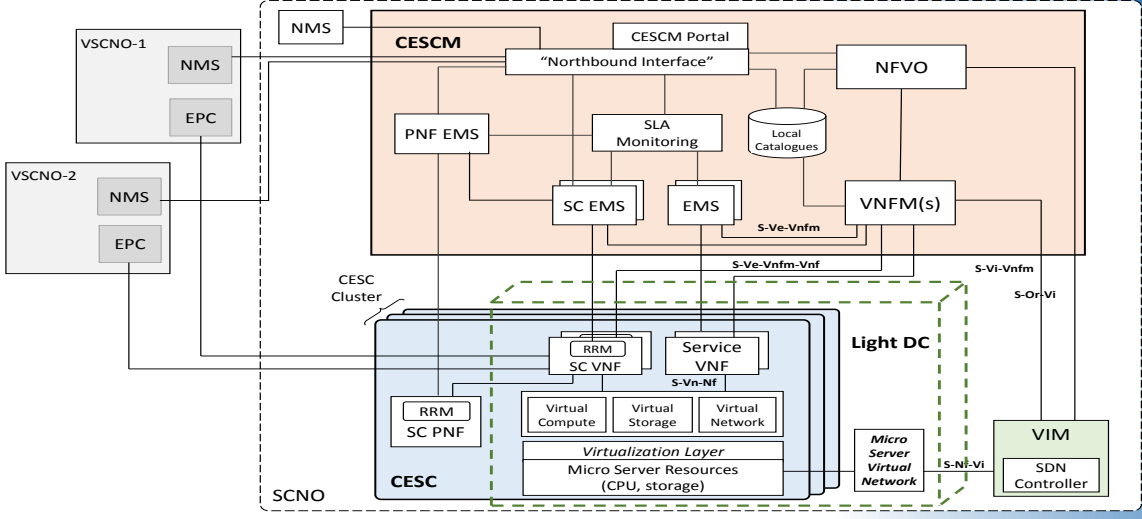

- Over the provided virtualised execution environment (Light DC), it is possible to chain different VNFs to meet a requested NS by a tenant (i.e. mobile network operator).
- A NS is understood as a collection of VNFs that jointly supports data transmission between User Equipment (UE) and operators' EPC, with the possibility to involve one or several service VNFs in the data path → *a chain of SC VNFs and Service VNFs.*
- The CESC Manager (CESCM) is the central service management and orchestration component in the overall architecture figure. It integrates all the necessary network management elements.

CESCM features

- **High-level management of CESCs:** providing lifecycle management of services on clusters in a PoP.
- **Low-level management of both radio and NFV infrastructure elements:** allowing fine-tune control of the radio part and the Light DC platform.
- **Multi-tenant support:** presenting different management capabilities to the Small Cell Network Operator (SCNO) and to the Virtual Small Cell Network Operators (VSCNOs).

CESCM features (II)

For SCNO

- Define VNFs and network services.
- Deploy the network services.
- Manage the lifecycle of VNFs and network services.
- Monitor CESCs and network services.
- Manage and monitor per-tenant SLAs.
- Configure radio and virtualisation parameters.
- Automatically reconfigure CESC- and cluster-level virtual resources.
- Define policies for service offerings, based on configurable parameters.

For VSCNO

- Act as the entry point for SESAME configurations.
- Show offered VNFs and network services.
- Define new network services to be deployed.
- Perform network service requests to the SCNO.
- Retrieve performance information of running services.
- Provide the status of active SLAs.

VIM features

- Create an abstraction layer to the CESCM of all the physical resources in a Light DC.
- Provide virtual resource management, in the Hypervisor domain, to provide appropriate control and management of VMs.
- Collect infrastructure utilisation/performance data.
- Integrate SDN controller functionalities.

COHERENT

- **Motivation**: Innovations needed to deal with the control and coordination problem in large-scale HMNs in order to release the full potential of 5G networks.
- **Approach**: *build upon advanced network abstractions concepts to enable an efficient and scalable solution for network-wide coordination in HMNs*.

➢ **Goal:** *design a novel control framework for 5G heterogeneous radio networks, to enable operators to dynamically control network resources*

- improve capacity
- spectrum reuse efficiency
- energy efficiency
- user experience

Innovations

Three innovations in control and coordination of 5G networks:

- **Physical and MAC layer modelling and abstraction**, to provide a simple network view of low-layer reality, and thus to enable a scalable and flexible control and coordination framework for complex resource coordination and spectrum management in 5G networks.
- **Programmable control based on the low-layer abstraction** with well-defined open interfaces and protocols to greatly simplify the management of HMN, to be verified by efficient resource coordination algorithms developed for identified 5G use cases.
- **Flexible and coordinated spectrum management** based on full awareness of spectrum usage through the COHERENT network abstractions

Technical Objectives

Research and develop a unified control and coordination framework for **5G heterogeneous radio access networks** (RAN), which focuses on:

1. Software Defined Networking for heterogeneous RANs.
2. Efficient radio resource modelling and management.
3. Flexible spectrum management
4. Support for Network Slicing and RAN Sharing

- **Key features**
  - Network abstraction and RAN programmability
  - Agile control and coordination framework
  - Support for network slicing

COHERENT Concept

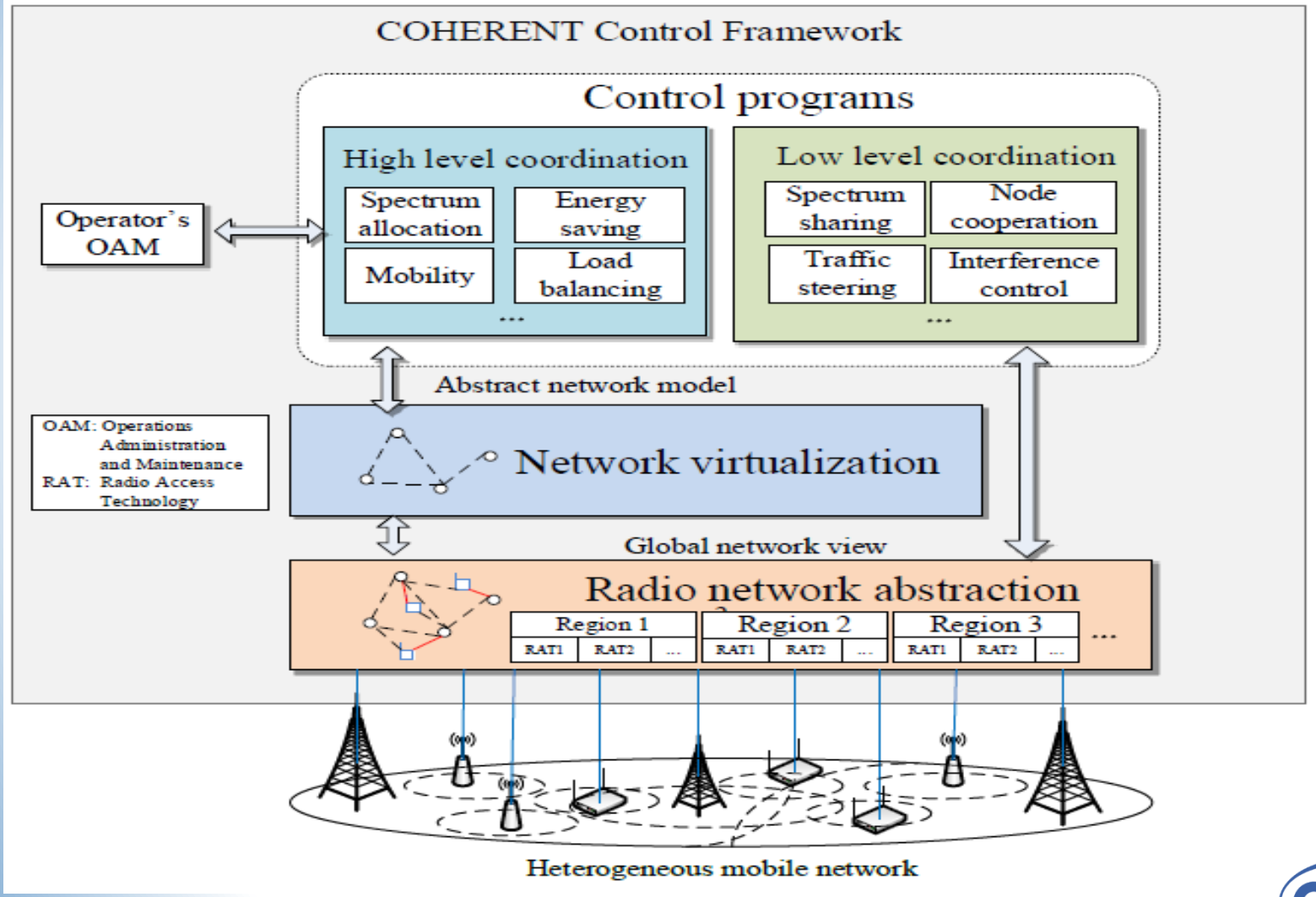

Develop an additional programmable control framework,

being aware of underlying network topology, radio environment and traffic conditions,

and
being able to efficiently coordinate wireless network resources across the border of cells.

Abstraction layers & Coordination

- **Multiple planes**
  - *data plane*
  - *control plane*
  - *application plane*.
- **Abstraction layers**
  - **infrastructure resource abstraction layer** (underlying physical and MAC layer)
  - **network service abstraction layer** (service abstractions for the applications and services).
- ***Central Controller and Coordinator (C3):***
  - A logical centralized entity in charge of logical centralized network-wide control and coordination among entities in RAN based on centralized network view.
  - Implemented with distributed physical control instances enabling network information sharing.
  - Creates the logically centralized network view and achieves logical centralized control and coordination.

Logical RAN Entities in COHERENT

- **Radio Transceiver (RT):** RT is a logical radio access entity with full RAN node functions, which is the flexible combination of R-TP, vRP and RTC functions. A set of RTs is forming a radio access network which is coordinated and controlled by C3.

- **Radio Transmission Point (R-TP):** is a radio access point implementing full or partial RAN node functions. An R-TP may include control plane functions.

- **Virtual Radio Processing (vRP)** a computing platform enabling centralized processing of full or partial RAN node functions. vRP is offloaded from one or multiple R-TPs and may include control plane functions.

- **Real Time Control (RTC):** is a logical entity in charge of local or region-wide control, targeting real-time control operations. Local network view. It could run directly on one RT or on a virtualized platform and receives monitoring information gathered from one/multiple RTs.

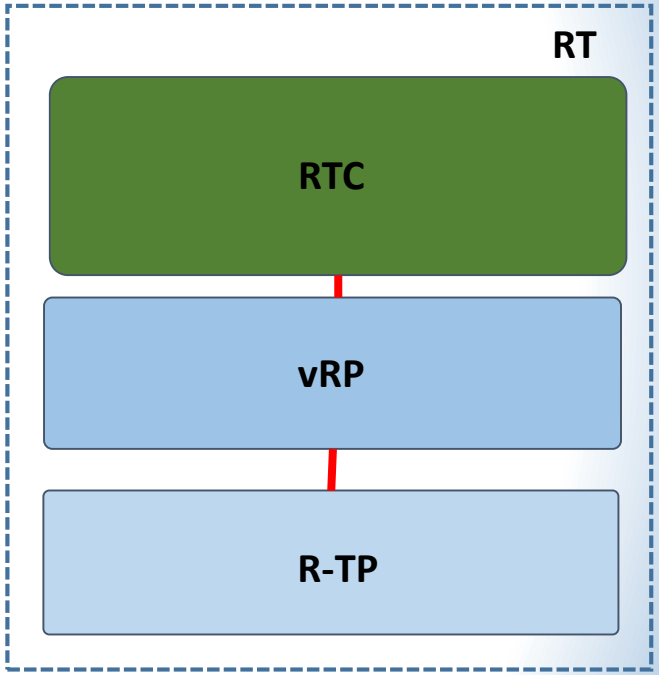

COHERENT Architecture

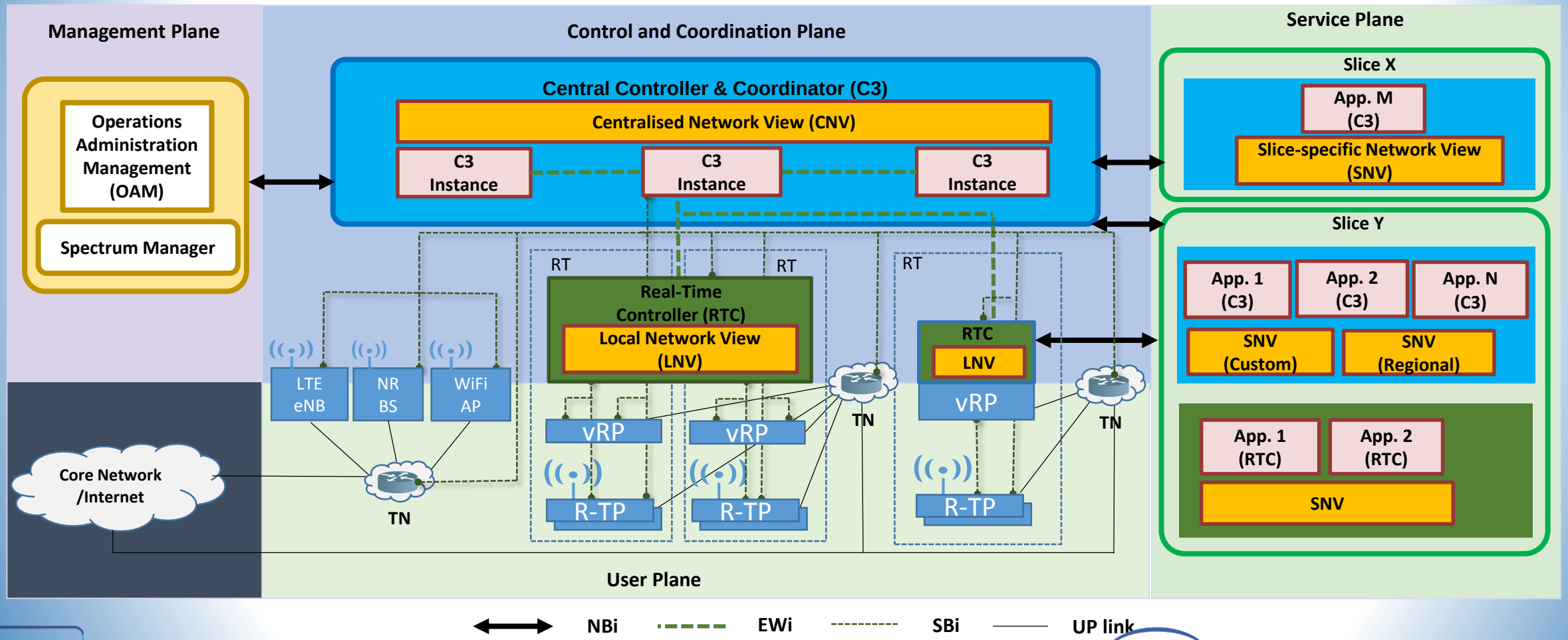

Network Slicing

***Network slice**: a partition of RAN with specific configurations used for particular business case.*

- The collection of all network slices aggregated form the total network resources of an operator.
- Slices can be spanned over a multitude of RATs / different operators.
- Span all domains of the network:
  - Different slices contain different network functions / configuration settings.
  - For each slice, network functions / storage resources located at network edges.

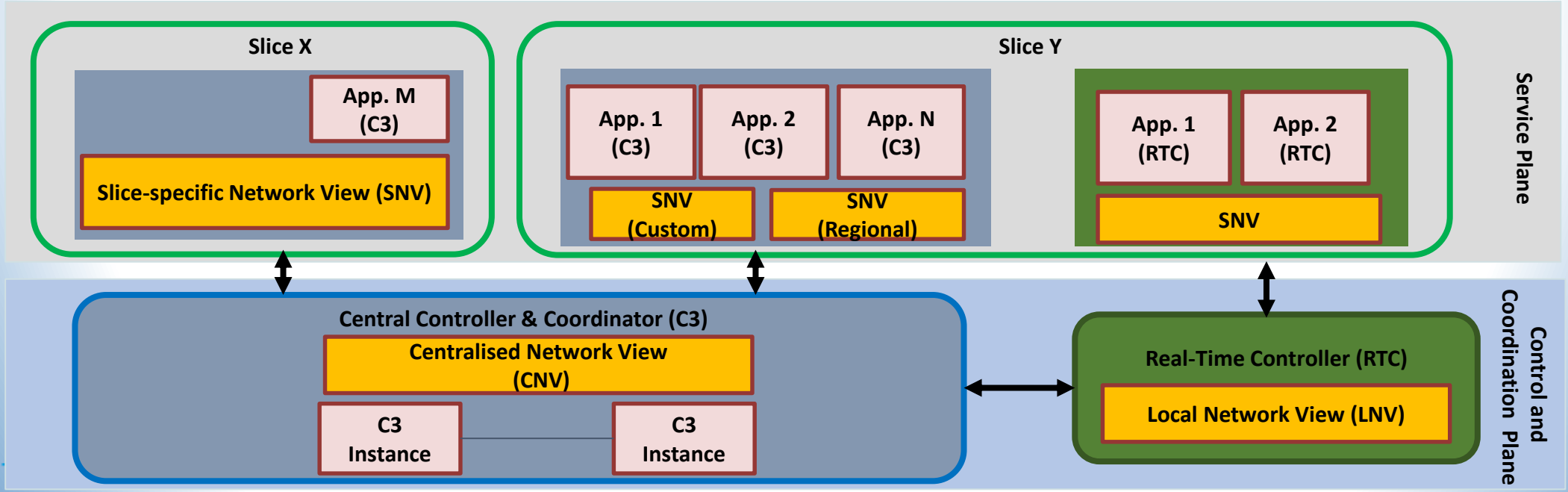

Common Design Aspects

Separation of control and data plane:

- **SESAME:** the SDN approach of decoupling control and data plane functions is indeed particularly suitable to make global decisions across several, possibly collocated, Small Cells.
- **COHERENT:** the separation of control and data plane allows the applications to programmatically control the heterogeneous mobile networks with lower complexity.

Controller for resource allocation:

- **SESAME:** CESC Manager in charge of managing and orchestrating the cloud environment of the Light DC, small cell functions, and multiple clusters.
- **COHERENT:** C3 and RTC responsible for the cooperation and joint resource allocation in heterogeneous RAN. C3 orchestrates the behaviors of network entities in the RAN. RTC deals with the fast status update and control decision for R-TP & vRP.

Common Design Aspects (cont.)

Virtualization and network slicing:

- **SESAME:** virtualization of Small Cell and utilization and partitioning into logically isolated slices, offered to multiple operators/tenants, satisfying profile and requirements.
- **COHERENT:** A composition of adequately configured network functions, network applications, and the underlying cloud infrastructure are bundled together to meet the requirements of a specific use case / business model.

Network and resource abstraction:

- **SESAME:** *hw/nw resources abstraction*
  - VIM manages of the HW and networking resources constituting of a cluster of micro-servers, namely the Light DC, and the networking nodes and links (virtual/physical).
- **COHERENT:** *nw state abstraction*
  - Representations and models of time-frequency resources, spatial capabilities, as well as throughput per network slice or per allocated resources.

Discussion

- 5G mobile infrastructure is intended to flexibly adapt to dynamically fluctuating traffic demands and a broad range of potentially new requirements of future service portfolios.
- The presented architecture design aspects are employed to address the aforementioned research challenges.
- 5G networks are expected to evolve the current business models, as well as bring new players within the market:
  - *third party infrastructure providers, MVNOs, enhance end-users' role in exploiting broadband access to services and applications*.

Thank you

Questions?

For Further Communication

Dr. Ioannis P. CHOCHLIOUROS
Head of Research Programs Section, Fixed
Coordinator of the SESAME Project

Dr. Alexandros KOSTOPOULOS
Research Programs Section, Fixed

Research and Development Department, Fixed & Mobile
Technology Strategy & Core Network Division, Fixed & Mobile

Hellenic Telecommunications Organization S.A. (OTE)
1, Pelika & Spartis Street
15122 Maroussi-Athens,
Greece

Tel.: +30-210-6114651,+30-210-6114671
Fax: +30-210-6114650
E-Mail: ichochliouros@oteresearch.gr ; ic152369@ote.gr ; alexkosto@oteresearch.gr ;

http://www.sesame-h2020-5g-ppp.eu/